# HEPP² High Efficiency Performance Pumps

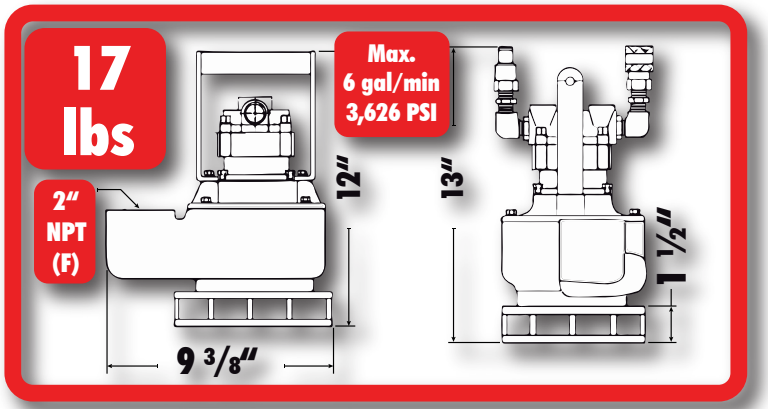


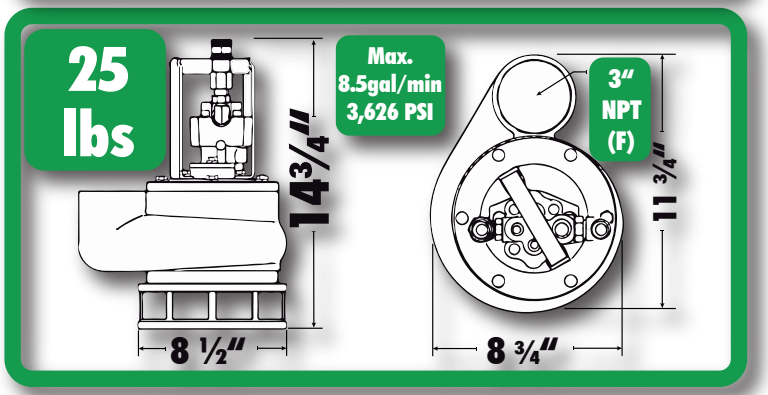


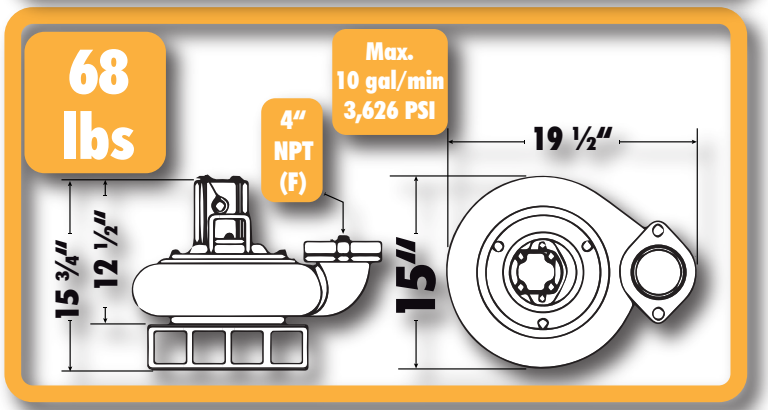


## Performance data for 2", 3" and 4" pumps

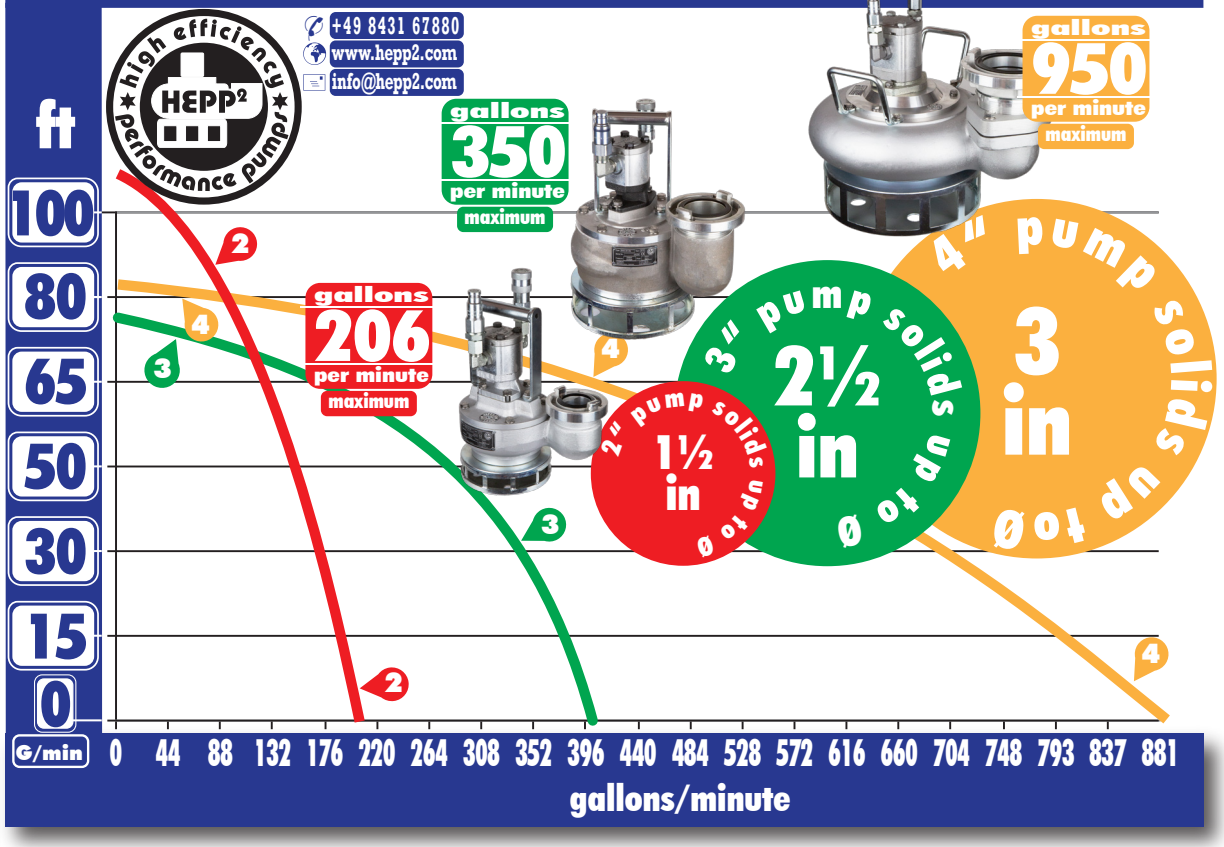


For further information, please mail:

**info@hepp2.com**

- sanitary sewage
- explosion proof
- can operate in dry mode
- extremely quiet
- integrated grinding function
- can handle fluids up to 170°F
- operates with bio degradable oil
- 100% electric shock proof
- handles mud/sludge
- little to no maintenance

maximum performance is achieved at maximum oil flow/pressure for each pump type (for details please refer to manual)

# HEPP² High Efficiency Performance Pumps

## vortex

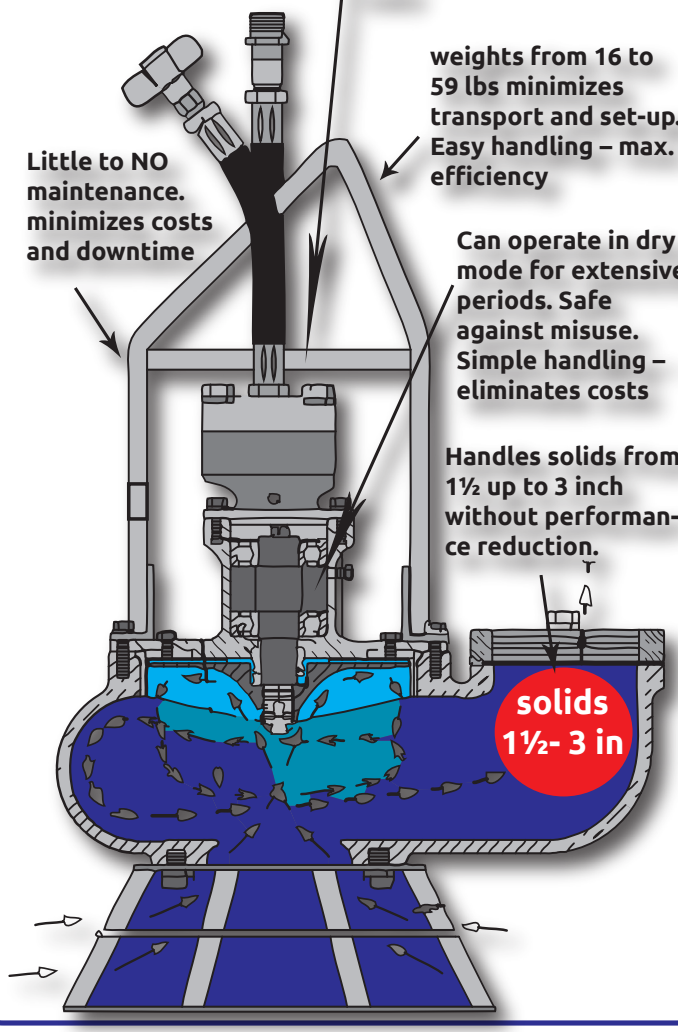

**power pack unit:**
- 18 HP BRIGGS & STRATTON Vanguard, industry series. 2 years warranty
- output to pumps is continuously variable adjustable
- small footprint: (roughly 28"w,33"d,30"h)
- only weihgs roughly 232 lbs
- gas powered by 2 cyl. engine
  - + very efficient
  - + very quiet
  - + very portable
  - + approved as per California emission regulations

**inclusive:**
- oil flow meter
- dual hydraulic hose (20ft)

package price **2 inch** [redacted] plus freight

package price **3 inch** [redacted] plus freight

package price **4 inch** [redacted] plus freight

complies with **CARB** California-Air-Resources-Board emission regulations
gasoline engine
small footprint $CO_2$

- double protection P T — pressure + return line
- drive train protected design
- centric drive line
- little to no maintenance
- special engineered cooler no maintenance
- latest oil cooler technology
- single lever control
- maximum speed + maximum cooling ≤ 101 Dezibel

maximum performance is achieved at maximum oil flow/pressure for each pump type (for details please refer to manual)