- can operate in dry mode
- sanitary sewage
- 100% electric shock proof
- explosion proof
- operates with bio degradable oil
- can handle fluids up to 170°F
- 100% e-check free
- extremely quiet
- handles mud/sludge
- integrated grinding function
- little to no maintenance

Operating Manual

Type: Hydraulic Submersible Pump 3 inch

PN: H0403-3030003

WARNING!

Please consider - all threads and screw sizes are metric !!
The actual female thread in the pump body is
BSP (metric and straight)
DO NOT screw a NPT adapter into pump body - risk of cracking pump body!

The pump adapter that comes with the pump is
BSP male to CamLock male

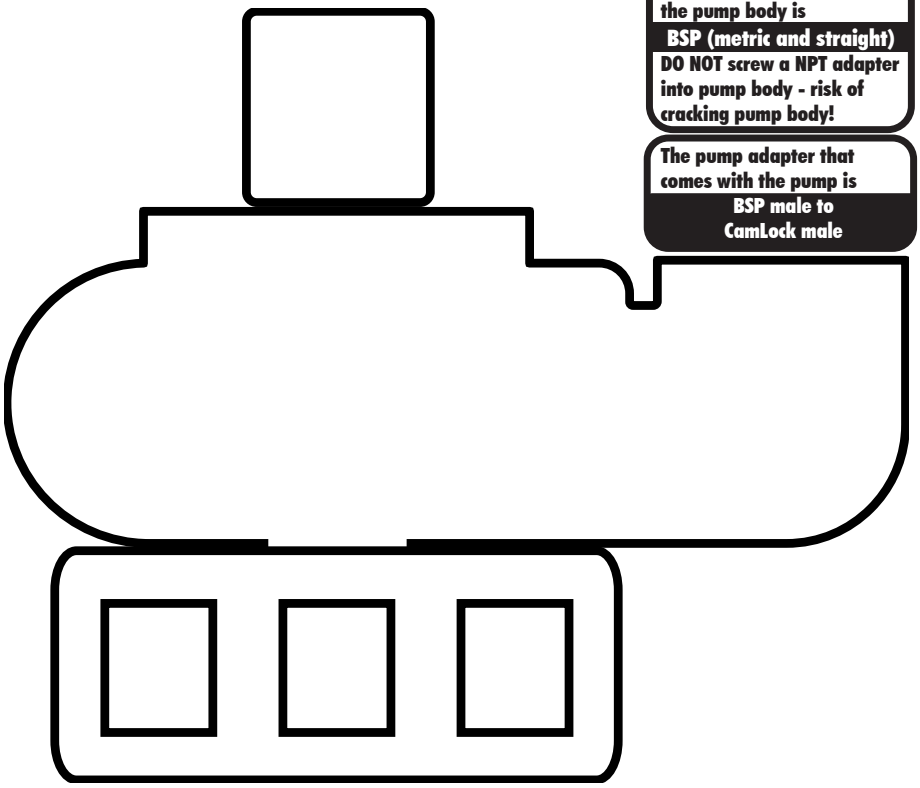

high efficiency performance power tools

HEPP2

http://www.hepp2.com/

Contents

Safety Precautions ____ 3

Important ____ 3

Dimensions ____ 4

Pumping Capacity ____ 5

Technical Data ____ 6

Oil Flow and Pressure ____ 6

Useful Information regarding the Use of the Pump ____ 6

Starting Instructions ____ 7

Connection to Hydraulic Power Sources ____ 7

Service and Maintenance ____ 8

Oil Types ____ 8

Warranty Terms ____ 8

The Votex System - the physics behind it ____ 9

Tips and tricks ____ 10

Safety Precautions

- Read the pump and power source operating manuals prior to use.
- Check the oil flow to the submersible pump (see technical data). Please also refer to **„Pumping Capacity“ on page 5**. A too high oil flow can cause the velocity on the pump to be too high and thereby involve a risk of defects.
- Make sure that the quick-release couplings are properly connected and locked. When disconnecting the couplings during operation, there is a risk of motor de-fects.
- Make sure that hose couplings and water hose are properly connected and locked.
- A fine jet of oil at pressure can penetrate the skin. It is therefore important never to use your fingers to check for oil leaks and never to hold your face close to su-spected leaks – use a piece of cardboard instead. If oil has penetrated the skin, you should get medical treatment immediately.
- Always use approved hoses. Contact your dealer, if necessary.
- The operator must pay extra attention and show caution when working in difficult working areas, such as slopes and other dangerous nature of the ground. Do not reach too far with the submersible pump, but always maintain a good footing and keep your balance. In excavations there is always a risk of earth slips.
- The operator must always use protective goggles, earplugs, hard hat and shoes when operating the submersible pump.
- Inspection or cleaning of the submersible pump and change or disconnection of hoses may never be done while the pump is connected to the powerpack.
- Always connect hoses to the submersible pump before starting the powerpack. Be sure that all couplings are tight.
- The pump may not be operated if the oil temperature is above 80 C° (176° F). Operation at higher temperatures may result in the pump (the motor) getting warmer than normal and the operator risks getting burnt on it.
- To avoid all personal injury and damage to material, all repair, maintenance and service work must be carried out by authorized or properly trained persons only.

Important

- A submersible pump not in use should always be kept in a safe and dry place.
- Always use hoses, couplings and spares as such recommend by HEPP. Always mount the hoses correctly, so that the pump runs the right way. If the pump runs the wrong way there is a risk of defects that are not covered by warranty.
- Repairs may only be carried out by experienced personnel.
- Make sure that all couplings are cleaned before connection.
- Always disconnect the hydraulic circuit before connecting or disconnecting the pump. If this is not done, there is a risk of damage to the quick release couplings or the motor or the hydraulic system getting superheated.

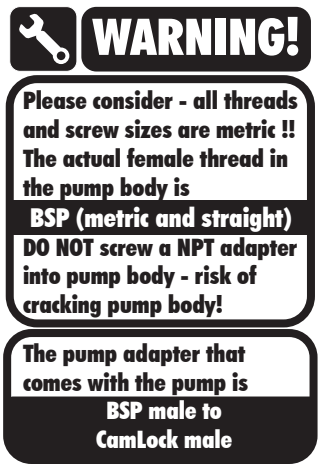

Dimensions

imperial (US)

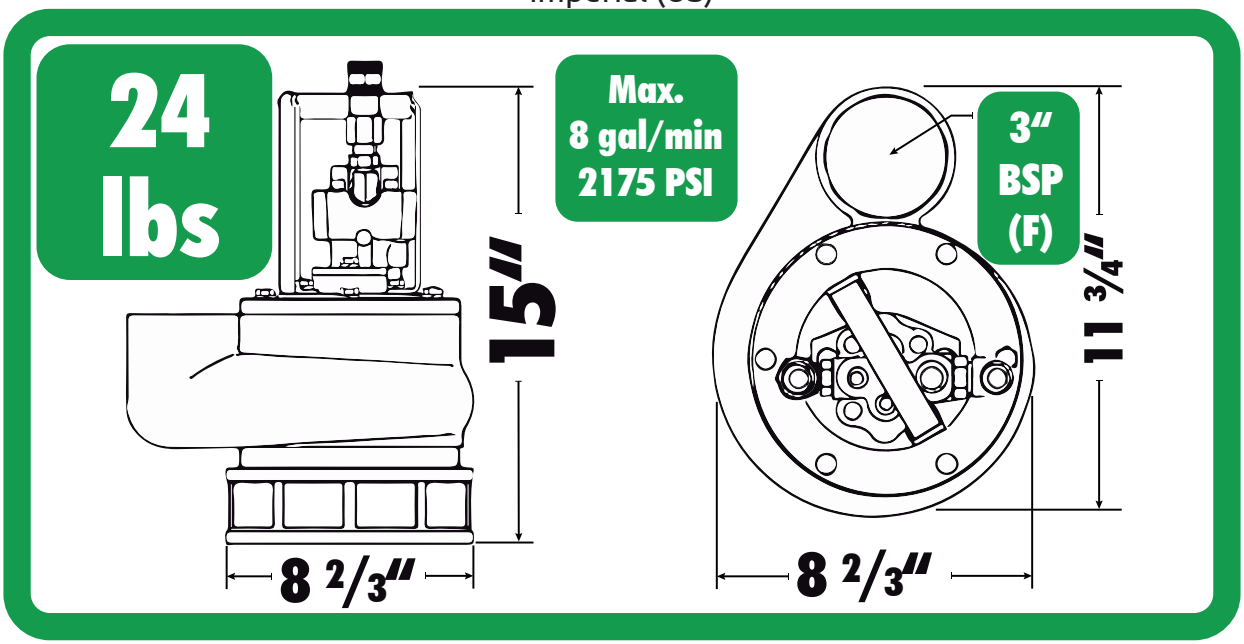

metric

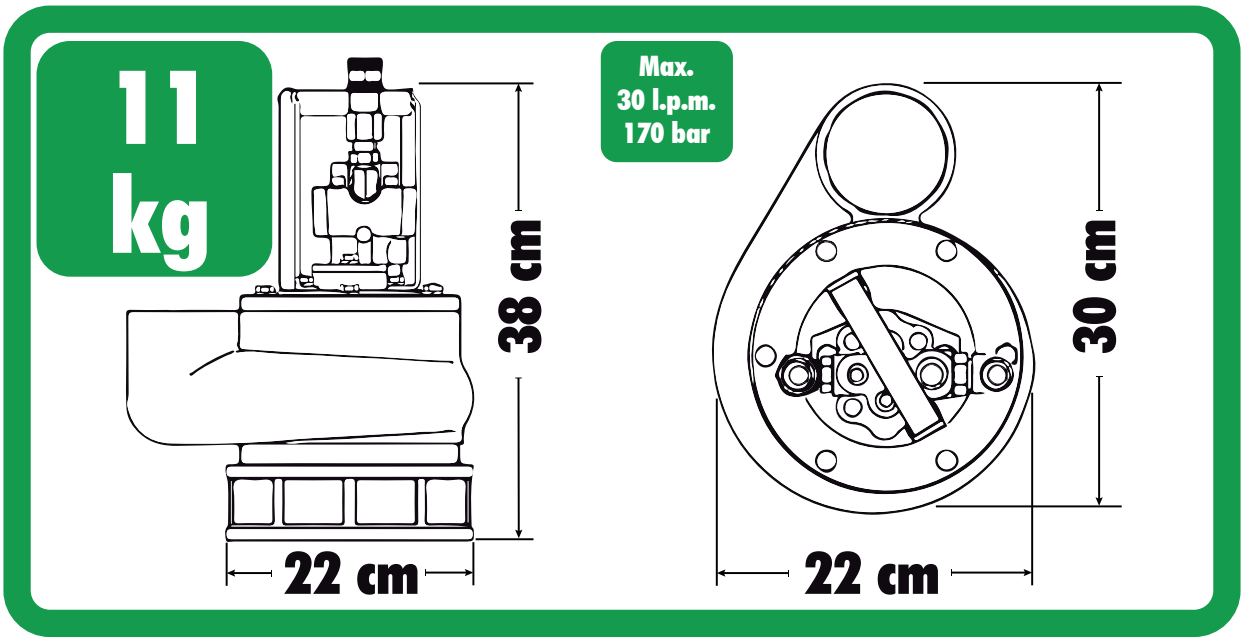

WARNING!

Please consider - all threads and screw sizes are metric !!
The actual female thread in the pump body is
BSP (metric and straight)
DO NOT screw a NPT adapter into pump body - risk of cracking pump body!

The pump adapter that comes with the pump is
BSP male to CamLock male

Pumping Capacity

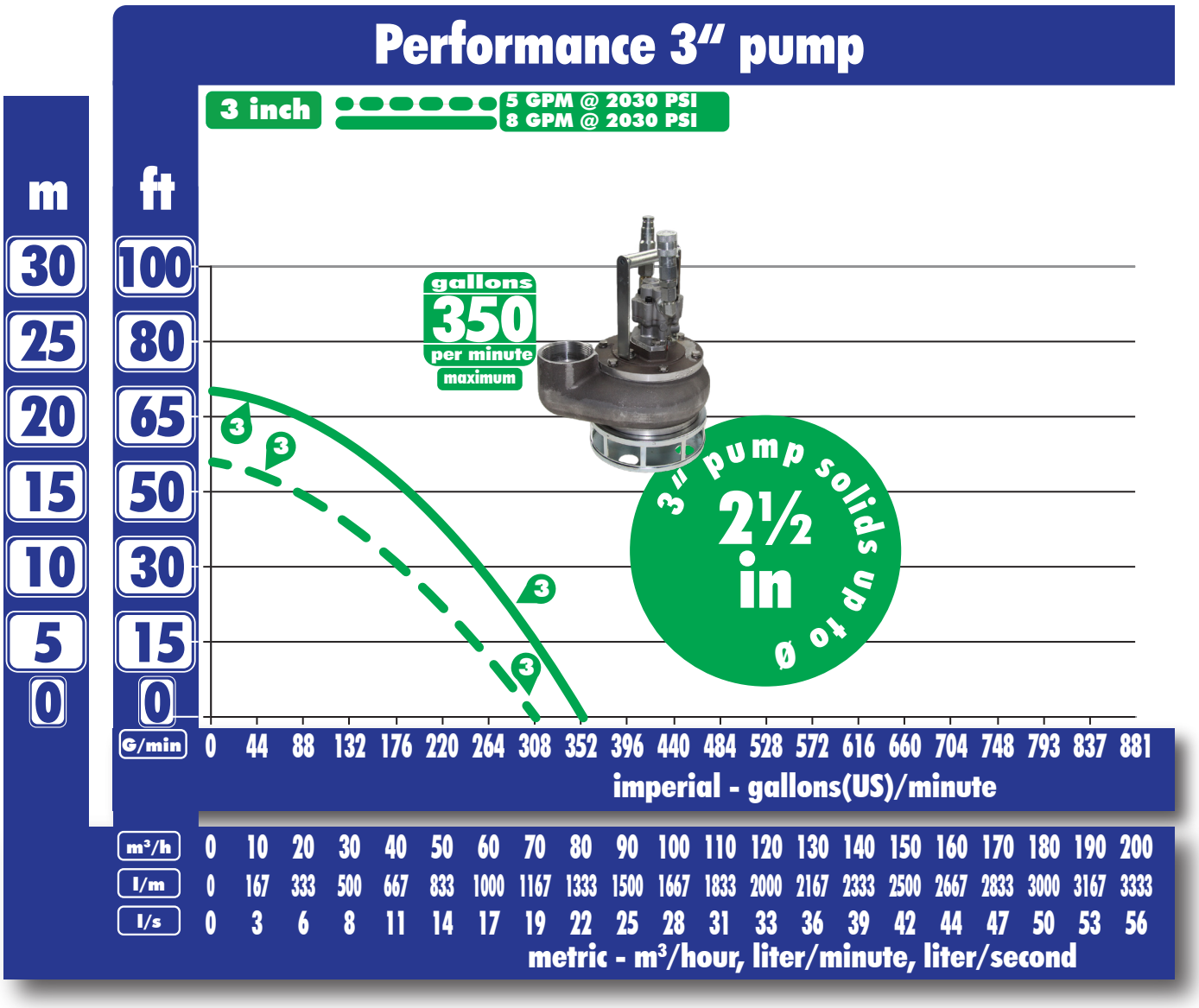

Submersible pumps are perfect tools for pumping all kinds of fluids – especially dirty fluids.

The pumps are VORTEX pumps, which are desined specifically to pump dirty fluids, without a need for extra maintenance and without reducingthe lifetime of the pump and its components. More about **„The Votex System - the physics behind it" on page 9.**

The the 3" pump solids up to ø63 mm (2½ inch). The pump can be used for many purposes and in many connections. In this respect an important feature of the pump is that it will not give any sparking.

The construction of the pump allows it to run dry without damage.

can operate in dry mode

Technical Data

	3” Pump metric	3” Pump imperial (US)
Weight w/o hoses:	11 kg	24.58 lbs
Oil flow:	20-30 l.p.m.	5-8 gallons/minute
Working pressure nominal:	120-150 bar	1,740-2,175 PSI
Pressure relief valve in power source:	Max. 172 bar	2,495 PSI
Max. return pressure:	40 bar	580 PSI
Max. oil temperature:	80°C	176° F
Max. water temperature:	80°C	176° F
Max. solid size:	ø63 mm	2 ½ inch
Max. pumping capacity:	80 m³/hour	21,133 gallons/hour
Max. head:	14 m	72.17 ft
Connection water hose:	3” thread internal BSP	3” thread internal BSP
May run dry:	Yes	Yes

Oil Flow and Pressure

Your new submersible pump is designed for a certain oil flow, working pressure and maximum pressure. A too high oil flow and/or a too high pressure results in overload of the pump, meaning that the lifetime of your new tool will not be as expected, and that your service and repair costs will be too high.

It is important to check that the pump is not supplied with an oil flow beyond its design capacity, that the working pressure is correct and that the maximum allowed pressure is not exceeded.

In **„Technical Data“** you will find the technical data, and in on **„Connection to Hydraulic Power Sources“ on page 7** there is a guide to connection to hydraulic power sources and how to ensure that the submersible pump is not overloaded.

Useful Information regarding the Use of the Pump

The submersible pump is compact and light and offers high performance.

The 3“ pump weighs 11 kg (24.58 lbs) and pumps up to 80 m³ per hour (350 gallons/minute). Only hydraulic submersible pumps have such high performance in relation to size.

The pump can also be connected to excavators and other machines. We recommend the use of a oil flow divider to protect the pump against a too high oil supply, a too high pressure and backwards rotation. Please refer to **„Connection to Hydraulic Power Sources“ on page 7**.

For operation in sensitive environments, you should only use biodegradable oil.

Starting Instructions

START

- Mount a water hose.
- Connect hoses – clean couplings before connection.
- Get a good footing before you start pumping.
- Lower the pump into the fluid. Make sure that the water hose is fixed.
- Set the power source on ”ON”.

STOP

- Set the power source on ”OFF”.

Connection to Hydraulic Power Sources

The submersible pump can be connected to various hydraulic power sources, such as excavators, trucks, loaders, tractors etc., and of course, HEPP² powerpacks, the design of which ensures your new pump the absolute best working conditions.

It is important that the submersible pump is not subjected to an oil flow and a work ing pressure beyond its design capability. Please refer to the ID-tag.

Check the oil flow and the working pressure by means of test equipment. The test equipment should comprise a pressure gauge, a flow meter and a valve for adjust- ment of pressure.

Make sure that:

- the oil supply is not too high
- the working pressure is not too high
- the return pressure is not too high
- the pressure relief valve is not set higher than 172 bar (2,495 PSI)
- the internal diameter of the hoses is sufficient (min. ½”)
- all couplings are in order
- the power source is equipped with an oil filter of min. 25 Micron

Hoses with too small internal diameter and/or defect couplings cause the pump to work with incorrect working pressure.

Your dealer can help you check this.

If the output of the power source is too high:

- the power source must be adjusted to correct output
- or you can choose to mount a oil flow divider to protect the pump against overload
- or you can choose one of our powerpacks. Your dealer can guide you in choosing the right powerpack.

In case of doubt, please contact your dealer

WARNING!

Please consider - all threads and screw sizes are metric !! The actual female thread in the pump body is

BSP (metric and straight)

DO NOT screw a NPT adapter into pump body - risk of cracking pump body!

The pump adapter that comes with the pump is

BSP male to CamLock male

Service and Maintenance

Service/Maintenance	Daily	Weekly	Yearly
Check couplings and clean carefully	X		
Check hydraulic hoses	X		

NB. At service/repair it is important that the quick-release couplings are mounted correctly.

Oil Types

The submersible pump uses standard hydraulic oil, i.e. all types of mineral oil and biodegradable oil, which comply with the following values:

Recommended viscosity:	**20-40 cSt**
Permitted viscosity:	**15-1000 cSt**
Viscosity index:	**Min. 100**
Temperature area:	**-20° to +70° C (-4° to + 158°F)**

If using biodegradable oil, we recommend the use of oil based on rape. Other types of oil can be aggressive towards parts of the pump.

Warranty Terms

We grant 12 months warranty from the first date of operation – however, not more than 18 months from the date of delivery.

The warranty applies to faults that can be related to construction and production errors.

Faults caused by incorrect operation, incorrect handling, lack of maintenance or the like, will not be accepted as warranty.

The warranty covers the parts necessary for repair and the suggested average time needed for repair.

For further warranty details, please contact your local dealer.

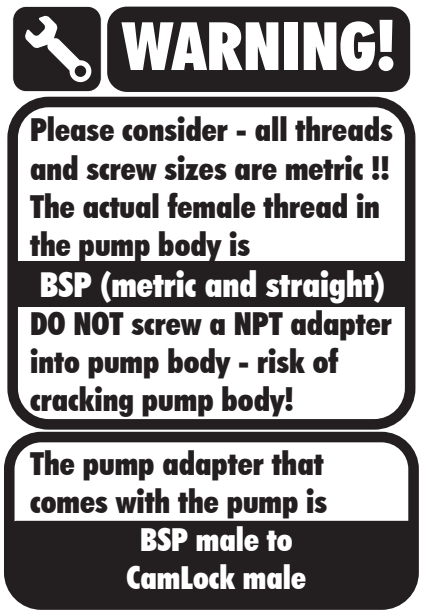

The Votex System - the physics behind it

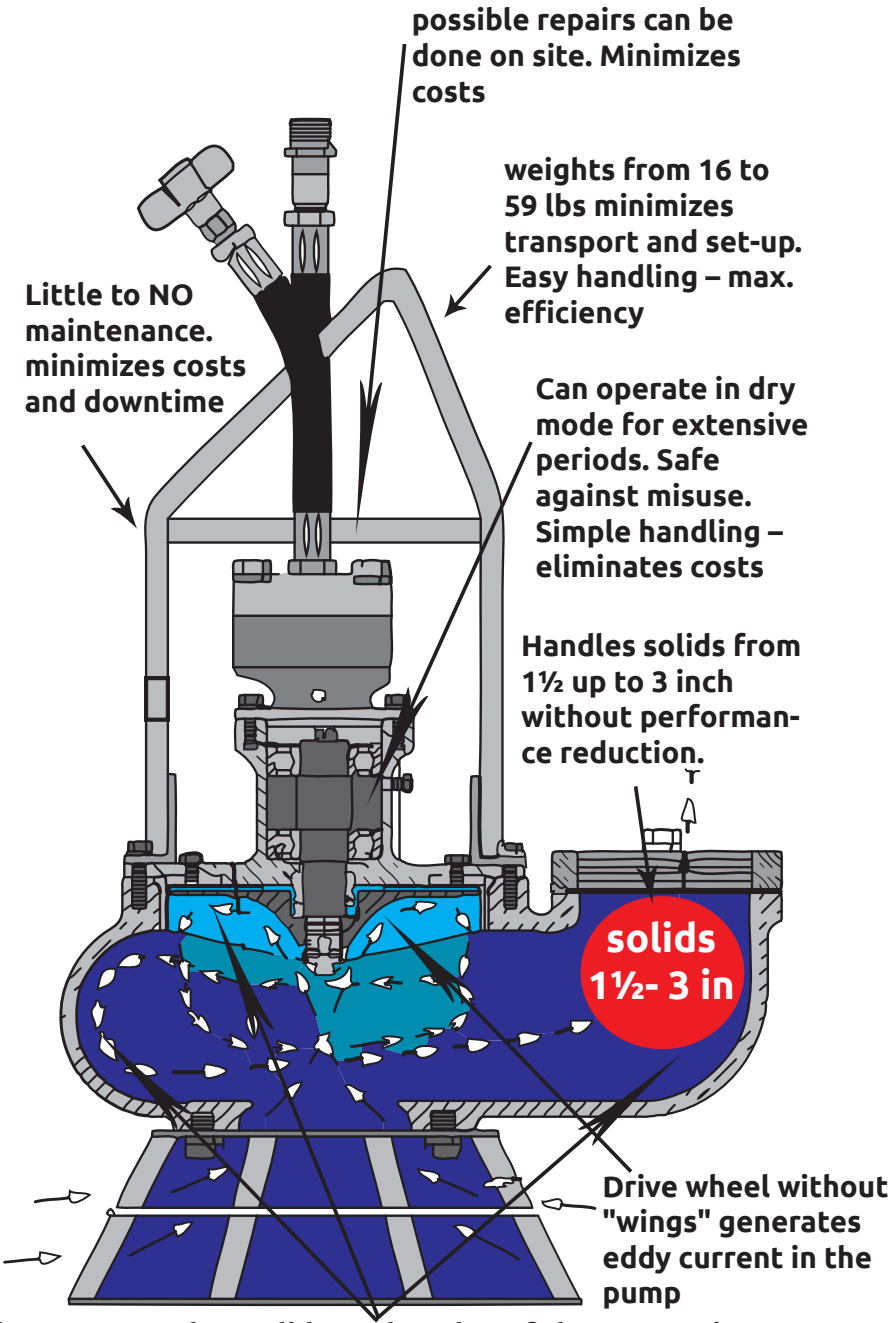

Eddy current pushes solids to the edge of the pump. Dirty water with abrasive components hardly comes into contact with impel-ler. This significantly reduces wear and maintenance costs.

Dark blue = high proportion of abrasive substances
Medium blue = mean proportion of abrasive substances
Light blue = low proportion of abrasive substances

WARNING!

Please consider - all threads and screw sizes are metric !!
The actual female thread in the pump body is
BSP (metric and straight)
DO NOT screw a NPT adapter into pump body - risk of cracking pump body!

The pump adapter that comes with the pump is
BSP male to CamLock male

Tips and tricks

to maximize the performace of the pump and to minimize the cost of pumping please note:

- Use **dimensionally stable hoses**.
- **Minimize the pump height**.
- If possible **get a negative height**. Place the **outlet below** the **inlet** of the **hose**.

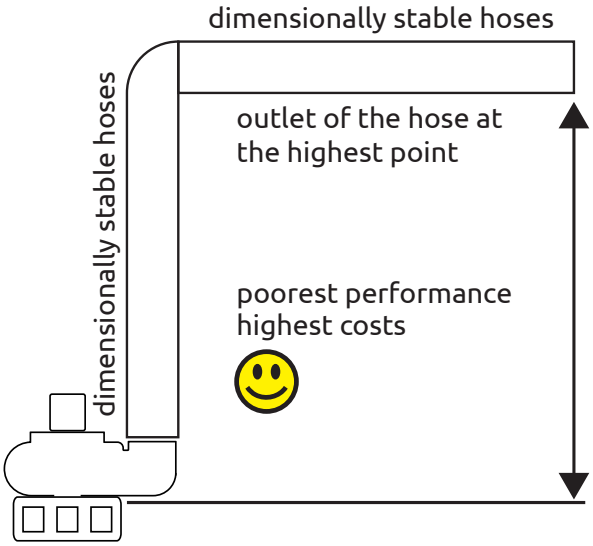

Lower the outlet of the hose for a better peformance.

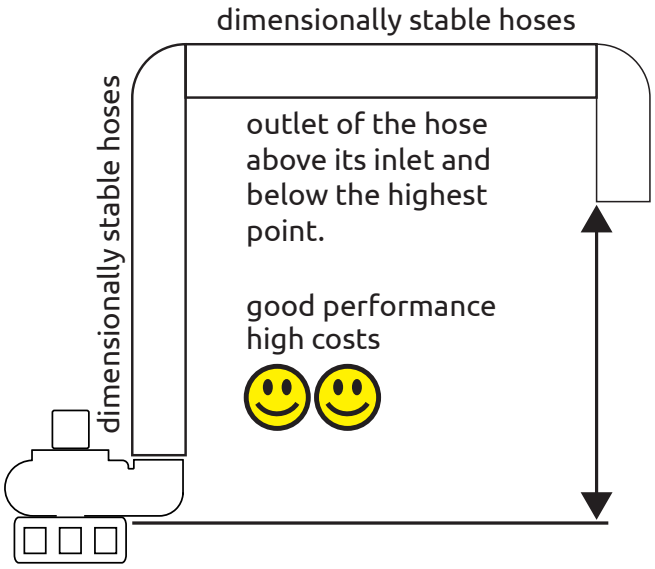

Using further dimensionally stable hoses gets a better perfomance of the pump

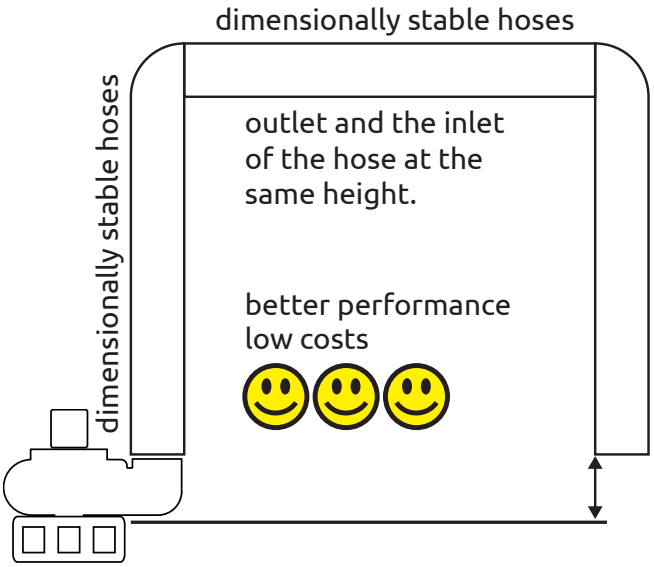

Place the outlet of the hose below its inlet you get the best performance possible. After the hose is filled with water this system keeps on pumping also if you stop the pump.

The water is running trough the pump without any further external energy.

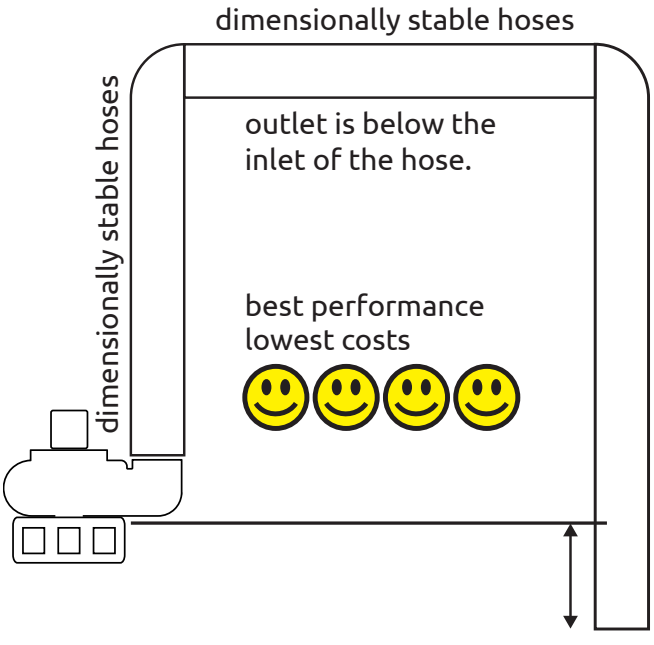

WARNING!

Please consider - all threads and screw sizes are metric !!
The actual female thread in the pump body is
BSP (metric and straight)
DO NOT screw a NPT adapter into pump body - risk of cracking pump body!

The pump adapter that comes with the pump is
BSP male to CamLock male